New Yorker 7

71.75" x 36" x 21.25"

GENERAL SPECIFICATIONS:

Material - Acrylic
Installation - Drop-in or Undermount
Not recommended as a tub / shower combination.
Plumbed Weight - 133 lbs / 60 kg
Soaker Weight - 110 lbs / 50 kg
Average Fill - 61 gal to above jet level
Maximum Fill - 102 gal to overflow
NOTE: Filling this tub to the maximum may require an above average size or dedicated water heater.

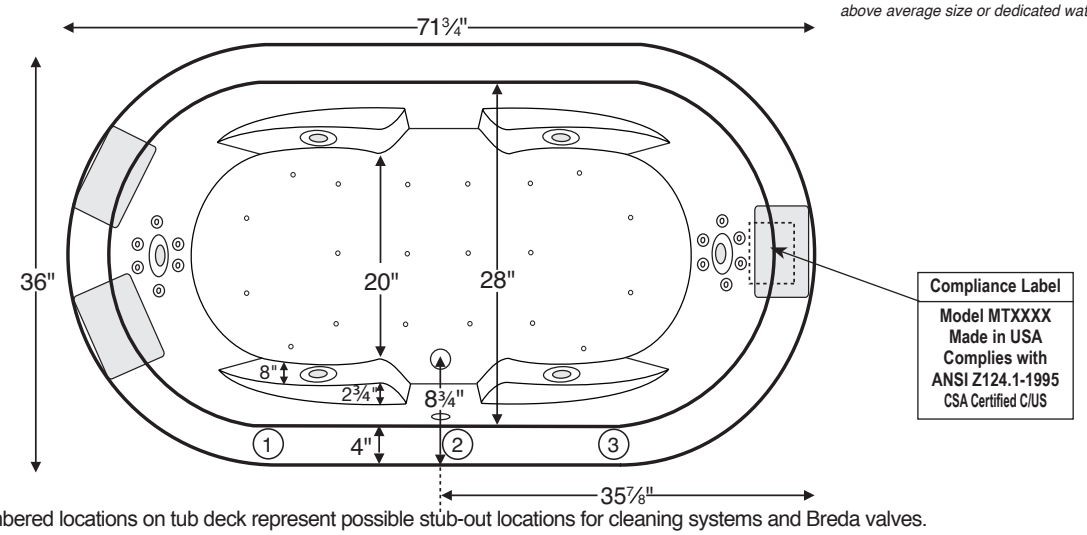

Numbered locations on tub deck represent possible stub-out locations for cleaning systems and Breda valves.
If location 2 is chosen for Fill-Flush, the detergent feeder will need to be offset to the left or the right.

Shown with Air Massage and Ultra Whirlpool Package.

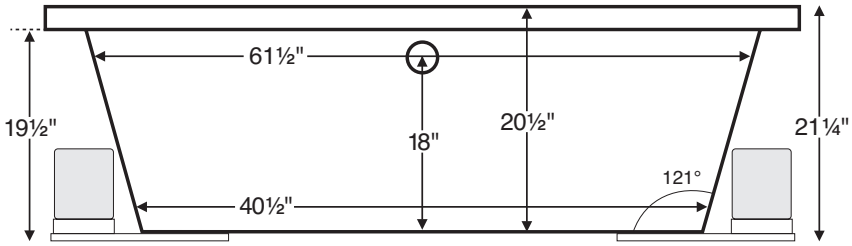

IMPORTANT:
Air baths and tubs with a pre-leveled foam base or frame system add 2-3" to overall tub height.

ELECTRICAL COMPONENTS & SPECIFICATIONS

Required Electrical Service - 110 Volt

Hydrotherapy Package	Components Included	GFCI
Standard Whirlpool	2-bhp pump	1-15 amp
Ultra Whirlpool	2 2-bhp pumps, inline heater	2-20 amp
Air Massage	heated blower	1-15 amp
Air Massage Elite	heated blower, chromatherapy	1-15 amp
Air Massage with Standard Whirlpool	2-bhp pump, heated blower	2-15 amp
Air Massage with Ultra Whirlpool	2 2-bhp pumps, inline heater, heated blower	2-20 amp
Air Massage Elite with Standard Whirlpool	2-bhp pump, heated blower, chromatherapy	2-15 amp
Air Massage Elite with Ultra Whirlpool	2 2-bhp pumps, inline heater, heated blower, chromatherapy	2-20 amp

For electrical requirements of tub options, see page C-2.

CSA Certified C/US; ANSI Z124.1 for plastic tubs and ANSI 112.19.7 for whirlpool components.

IMPORTANT ORDERING & INSTALLATION INFORMATION:

- Before ordering or installing, please consider future access to equipment.
- Add bedding compound to fully level and support bottom of tub.
- Tubs equipped with an air bath or a pre-leveled foam base are designed to rest on the floor *without* bedding compound, provided the floor is level.
- **Overall tub height is increased by approx. 2-3" when tub is equipped with any air bath package or when pre-leveled foam base or frame system is ordered.**
- Please measure tub **on-site** before building tub decking.
- Suction and control locations may vary.
- Specifications and configurations are subject to change without notice.
- Measurements are ±1/2" and are subject to change without notice.
- Measurements herein supersede all others published prior to publication date shown below.

*See the "Designer Collection Tubs Installation & Operation Manual" included with tub delivery or go to **mtibaths.com/support/installation_operation/manuals** for all the information necessary to install and operate the tub.*

MTI's Customer Service Department is available Monday-Friday 8am-6pm EST at 800-783-8827 or customerservice@mtibaths.com to answer any questions pertaining to ordering or installation.

©2015 by MTI Baths, Inc. Modification Rights Reserved.

New Yorker 7

71.75" x 36" x 21.25"

Hydrotherapy Packages		Package Contents	Standard Pump/Blower Locations	Part # *Specify 'DI' for drop-in or 'UM' for undermount*	MSRP
Soaker		soaking bath - no jets		**S213-DI** **S213-UM**	**$2,140**
Whirlpool Packages	*Standard Whirlpool*	6 point-massage jets, 2-bhp pump	P	**P213-DI** **P213-UM**	**$4,025**
	Ultra Whirlpool	6 point-massage jets, 12 micro-jets with Tsubo massage, 2 2-bhp pumps, inline heater	P P	**P213U-DI** **P213U-UM**	**$6,550**
Air Bath Packages	*Air Massage*	20 air jets, heated air blower, Aromatherapy, pre-leveled foam base (increases overall height 2-3")	B	**AST213-DI** **AST213-UM**	**$4,740**
	Air Massage Elite	30 air jets, heated air blower, Aromatherapy, Chromatherapy LED lighting, Spa Mode, pre-leveled foam base (increases overall height 2-3")	B	**AE213-DI** **AE213-UM**	**$6,340**
Air Bath / Whirlpool Combo Packages	*Air Massage with Standard Whirlpool*	6 point-massage jets, 2-bhp pump, 20 air jets, heated air blower, Aromatherapy, pre-leveled foam base (increases overall height 2-3")	B P	**AW213-DI** **AW213-UM**	**$6,750**
	Air Massage with Ultra Whirlpool	6 point-massage jets, 12 micro-jets with Tsubo massage, 2 2-bhp pumps, inline heater, 20 air jets, heated air blower, Aromatherapy, pre-leveled foam base (increases overall height 2-3")	B P P	**AU213-DI** **AU213-UM**	**$9,815**
	Air Massage Elite with Standard Whirlpool	6 point-massage jets, 2-bhp pump, 30 air jets, heated air blower, Aromatherapy, Chromatherapy LED lighting, Spa Mode, pre-leveled foam base (increases overall height 2-3")	B P	**AEAP213-DI** **AEAP213-UM**	**$8,645**
	Air Massage Elite with Ultra Whirlpool	6 point-massage jets, 12 micro-jets with Tsubo massage, 2 2-bhp pumps, inline heater, 30 air jets, heated air blower, Aromatherapy, Chromatherapy LED lighting, Spa Mode, pre-leveled foam base (increases overall height 2-3")	B P P	**AEAP213U-DI** **AEAP213U-UM**	**$11,270**

Lead Time *- Soakers and Whirlpool Packages - 5 business days*
Air Baths and Combo Packages - 7 business days

NOTES: *• Aromatherapy is eliminated for undermount applications*
• Air Baths or Pre-Leveled Foam Base increase overall height by 2-3".

Premium Options

NOTE: part codes for all options listed in parenthesis.

Stream Bath - provides a relaxing water current (STREAM) **$1,695**
Available for soaker or air bath packages only. See p. C-3 for detailed specifications.

Radiance - integrated tub shell heating system (RAD100) **$999** *see p. C-5*

Chromatherapy - underwater LED lighting (LE) **$560** *see p. C-6*
Included in some hydrotherapy packages listed above.

Stereo H_2O - includes 4 integrated audio transducers (STEREOH20) **$1,099**
Requires audio source(s) and amplification not provided by MTI - see p. C-7.

Standard Options

Standard Colors: White (CWH), Bone (CBN), Biscuit (CBS)
Color Upgrade: (COL2) **$485** *See p. C-1 for individual color part codes.*

Quick Ship - *reduces lead time - please call for availability* (QSPRI) **$350**

Textured, Slip-Resistant Bottom - meets ASTMF-462-1994 (TXBTM) **$70**

Virtual Spout - high-flow integrated tub filler (FPMJ) **$300** *see p. C-11*

Inline Heater - *included in some hydrotherapy packages listed above - see p. C-9*
Whirlpools, Combos or Stream Bath (HTI) **$495** *Uses existing pump.*
Soaker or Air Baths (HTISOAK) **$695** *Includes a recirculating pump.*

Installation Aids

Template - Available for drop-in applications ONLY. (TEMPLATE213)
No charge if shipped with tub. $25 if shipped separately.

Pre-Leveled Foam Base - *for soaker or whirlpools* (PLFOAM) **$165** *see p. C-27*

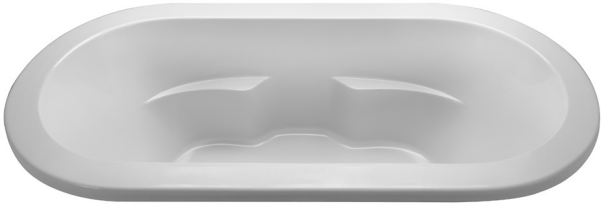

Inside view of tub.

Note: Addition of options may alter standard pump/blower locations shown above.

Accessories & Hardware for All Packages

Drain Kits - *other finishes also available see pp. C-12-13*

Toe-Tap with Slim-Line Integrated Overflow
Choose from: Chrome (SLOTC), Brushed Nickel (SLOTBN), Polished Nickel (SLOTPN) or White (SLOTWH) **$400**

Toe-Tap with Rectangular Overflow - Chrome (WOTRC) **$260**; Brushed Nickel (WOTRBN) **$265**; White (WOTRW) **$265**

Toe-Tap with Round Overflow - Chrome (WOTTC) **$260**; Brushed Nickel (WOTTBN) **$265**; Polished Nickel (WOTTPN) **$315**

Cable Driven - Chrome (WOCD) **$290**; Brushed Nickel (WOCDBN) **$335**; Polished Nickel (WOCDPN) **$475**; Oil-Rubbed Bronze (WOCDOR) **$475**

Lift & Turn - Chrome (WOC) **$115**; Brushed Nickel (WOBN) **$210**

Grab Bars - 9" Curved, set of 2 *see p. C-14*
Acrylic - color-matched with tub - *standard colors only* (GB) **$290**
Metal - Chrome (GBMCC), Brushed Nickel (GBMCBN) **$320**

Pillows - from **$115** *see p. C-14*

Teak Tub Tray - Slatted (TK-TRAY1) or Solid (TK-TRAY2) **$395** *see p. C-15*

Teak Bath Mat (TK-MAT3018) **$395** *custom sizes also available - see p. C-15*

Accessories & Cleaning Systems for Whirlpool Packages

Trim Kits - *must be ordered at time of tub purchase; other finishes available - see p. C-19*
Standard Whirlpool - Chrome (TRC) **$220**; Brushed Nickel (TRBN) **$550**
Ultra Whirlpool - Chrome (TRCU) **$295**; Brushed Nickel (TRBNU) **$750**

Pump Upgrade - 3-bhp (PUMP3) **$230**

Additional Jet Options *see p. C-18*

Whirlpool Cleaning Systems - *see pp. C-20-24*
Fill-Flush (FFSO) **$560**; Simple Touch (FFE) **$650**

Ozonator - bath water purification system (OZONE) **$495** *see p. C-25*